Quick Reference Guide

General Information

Table of Contents

1

Before Servicing

Before starting to perform an inspection service or carry out a disassembly and reassembly operation on a vehicle, read the precautions given below. To facilitate actual operations, notes, illustrations, photographs, cautions, and detailed descriptions have been included in each chapter wherever necessary. This section explains the items that require particular attention during the removal and reinstallation or disassembly and reassembly of general parts.

Especially note the following:

Battery Ground

Before completing any service on the vehicle, disconnect the battery wires from the battery to prevent the engine from accidentally turning over. Disconnect the ground wire (–) first and then the positive (+). When completed with the service, first connect the positive (+) wire to the positive (+) terminal of the battery then the negative (–) wire to the negative terminal.

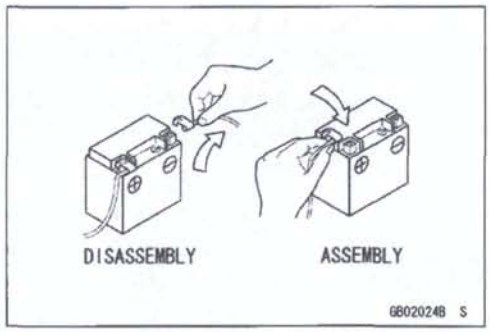

Edges of Parts

Lift large or heavy parts wearing gloves to prevent injury from possible sharp edges on the parts.

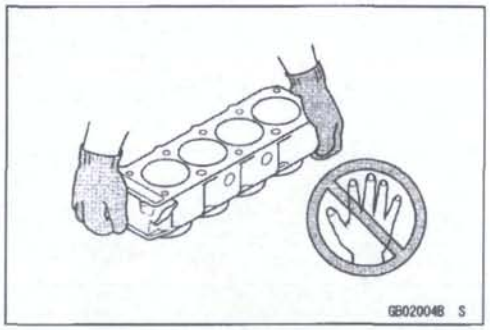

Solvent

Use a high-flush point solvent when cleaning parts. High -flush point solvent should be used according to directions of the solvent manufacturer.

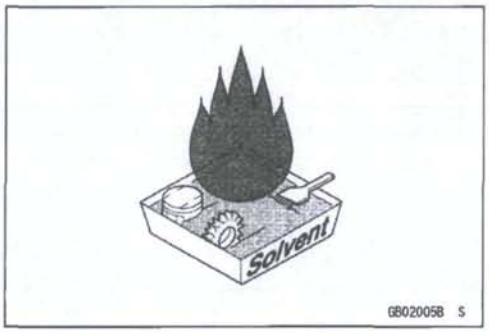

Cleaning Vehicle before Disassembly

Clean the vehicle thoroughly before disassembly. Dirt or other foreign materials entering into sealed areas during vehicle disassembly can cause excessive wear and decrease performance of the vehicle.

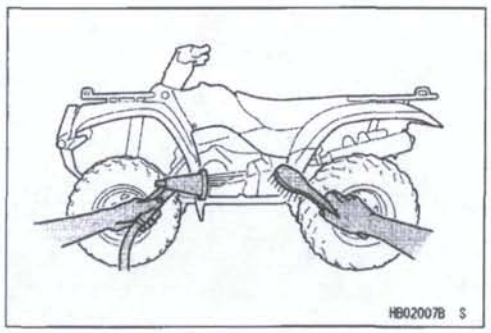

Before Servicing

Arrangement and Cleaning of Removed Parts

Disassembled parts are easy to confuse. Arrange the parts according to the order the parts were disassembled and clean the parts in order prior to assembly.

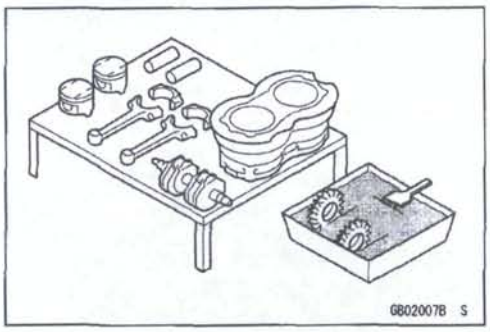

Storage of Removed Parts

After all the parts including subassembly parts have been cleaned, store the parts in a clean area. Put a clean cloth or plastic sheet over the parts to protect from any foreign materials that may collect before re-assembly.

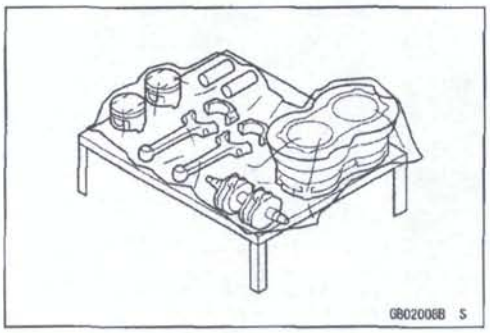

Inspection

Reuse of worn or damaged parts may lead to serious accident. Visually inspect removed parts for corrosion, discoloration, or other damage. Refer to the appropriate sections of this manual for service limits on individual parts. Replace the parts if any damage has been found or if the part is beyond its service limit.

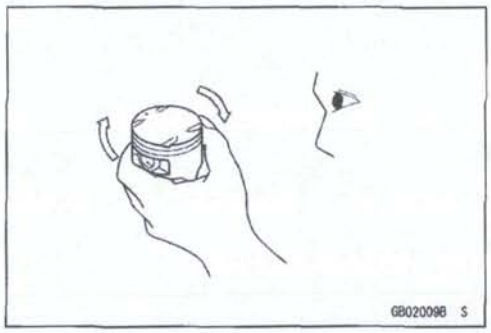

Replacement Parts

Replacement Parts must be KAWASAKI genuine or recommended by KAWASAKI. Gaskets, O-rings, Oil seals, Grease seals, circlips or cotter pins must be replaced with new ones whenever disassembled.

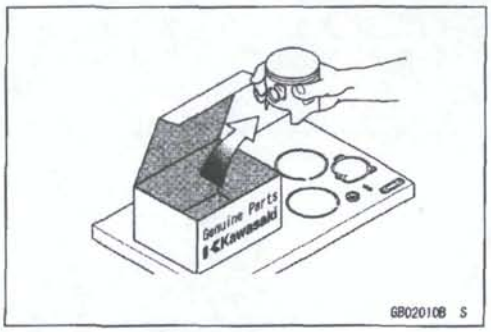

Assembly Order

In most cases assembly order is the reverse of disassembly, however, if assembly order is provided in this Service Manual, follow the procedures given.

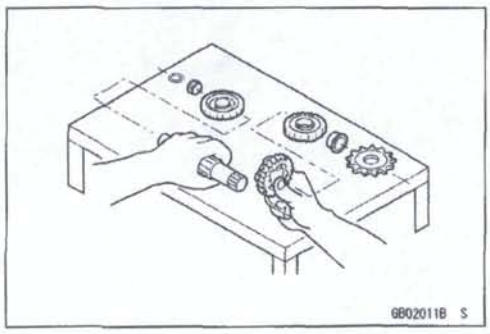

Before Servicing

Tightening Sequence

Generally, when installing a part with several bolts, nuts, or screws, start them all in their holes and tighten them to a snug fit. Then tighten them according to the specified sequence to prevent case warpage or deformation which can lead to malfunction. Conversely when loosening the bolts, nuts, or screws, first loosen all of them by about a quarter turn and then remove them. If the specified tightening sequence is not indicated, tighten the fasteners alternating diagonally.

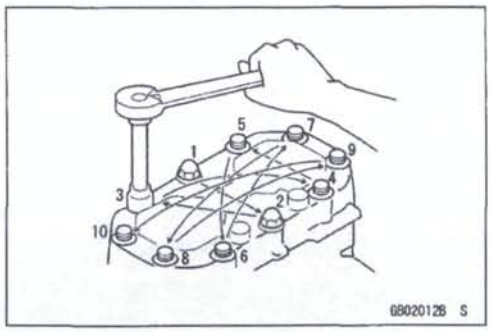

Tightening Torque

Incorrect torque applied to a bolt, nut, or screw may lead to serious damage. Tighten fasteners to the specified torque using a good quality torque wrench.

Often, the tightening sequence is followed twice initial tightening and final tightening with torque wrench.

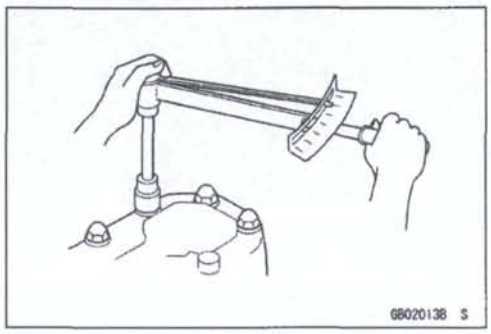

Force

Use common sense during disassembly and assembly, excessive force can cause expensive or hard to repair damage. When necessary, remove screws that have a non -permanent locking agent applied using an impact driver. Use a plastic-faced mallet whenever tapping is necessary.

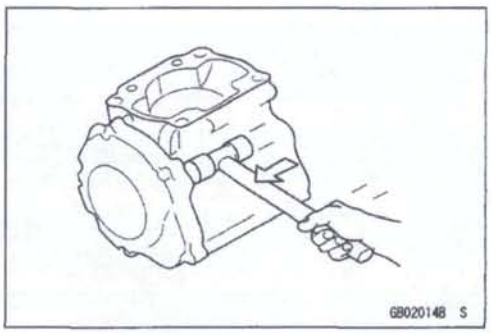

Gasket, O-ring

Hardening, shrinkage, or damage of both gaskets and O-rings after disassembly can reduce sealing performance. Remove old gaskets and clean the sealing surfaces thoroughly so that no gasket material or other material remains. Install new gaskets and replace used O-rings when re-assembling.

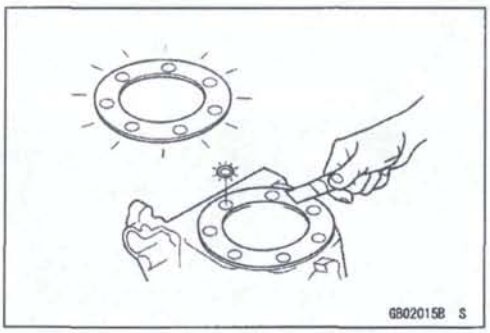

Liquid Gasket, Locking Agent

For applications that require Liquid Gasket or a Non-Permanent Locking Agent, clean the surfaces so that no oil residue remains before applying liquid gasket or locking agent. Do not apply them excessively. Excessive application can clog oil passages and cause serious damage.

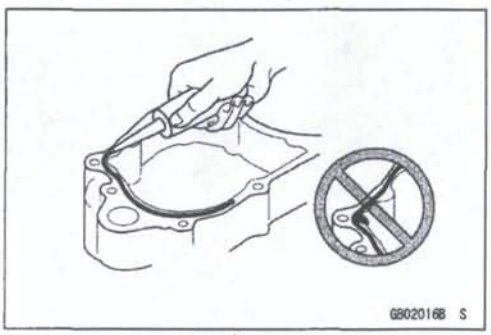

Before Servicing

Press

For items such as bearings or oil seals that must be pressed into place, apply small amount of oil to the contact area. Be sure to maintain proper alignment and use smooth movements when installing.

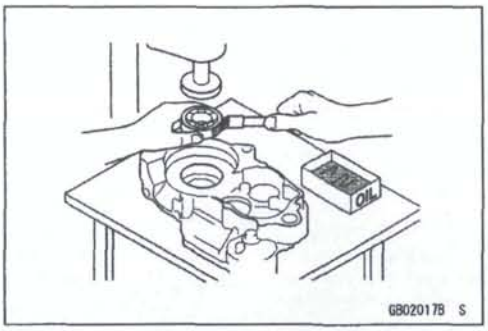

Ball Bearing and Needle Bearing

Do not remove pressed ball or needle unless removal is absolutely necessary. Replace with new ones whenever removed. Press bearings with the manufacturer and size marks facing out. Press the bearing into place by putting pressure on the correct bearing race as shown.

Pressing the incorrect race can cause pressure between the inner and outer race and result in bearing damage.

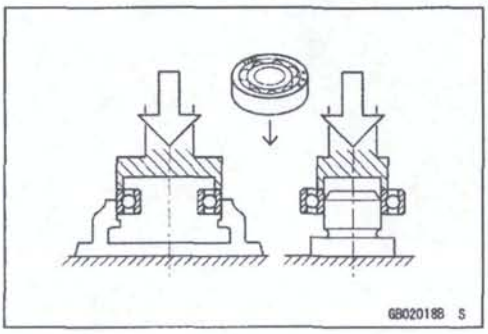

Oil Seal, Grease Seal

Do not remove pressed oil or grease seals unless removal is necessary. Replace with new ones whenever removed. Press new oil seals with manufacture and size marks facing out. Make sure the seal is aligned properly when installing.

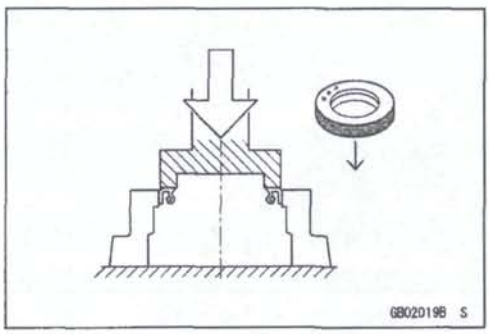

Apply specified grease to the lip of seal before installing the seal.

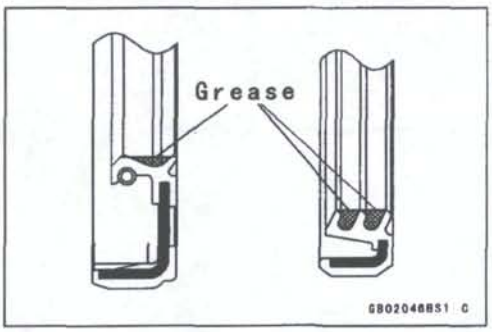

Circlips, Cotter Pins

Replace circlips or cotter pins that were removed with new ones. Take care not to open the clip excessively when installing to prevent deformation.

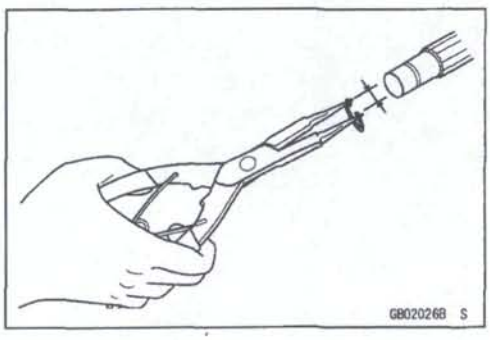

Before Servicing

Lubrication

It is important to lubricate rotating or sliding parts during assembly to minimize wear during initial operation. Lubrication points are called out throughout this manual, apply the specific oil or grease as specified.

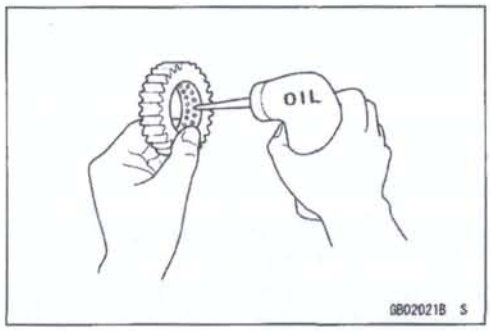

Direction of Engine Rotation

When rotating the crankshaft by hand, the free play amount of rotating direction will affect the adjustment. Rotate the crankshaft to positive direction (clockwise viewed from output side).

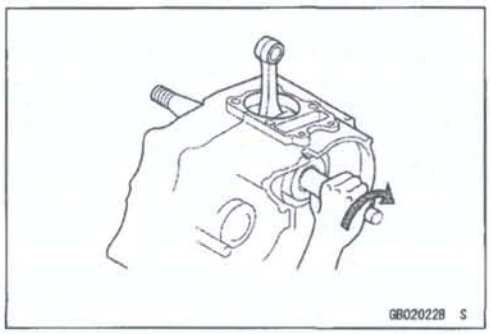

Electrical Wires

A two-color wire is identified first by the primary color and then the stripe color. Unless instructed otherwise, electrical wires must be connected to those of the same color.

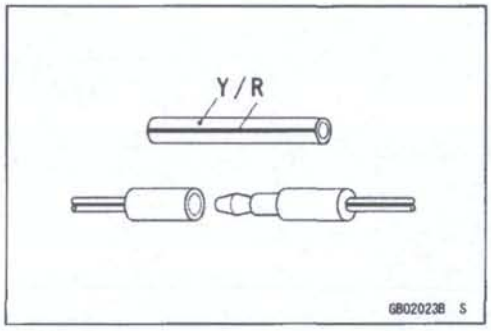

Instrument

Use a meter that has enough accuracy for an accurate measurement. Read the manufacture's instructions thoroughly before using the meter. Incorrect values may lead to improper adjustments.

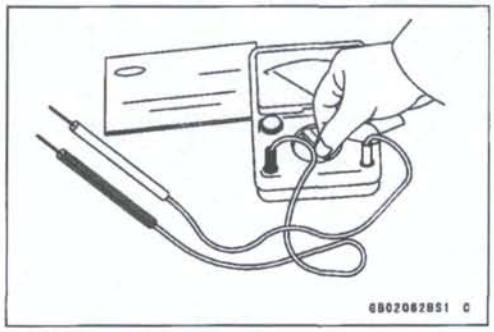

Model Identification

KSF450B8F Left Side View

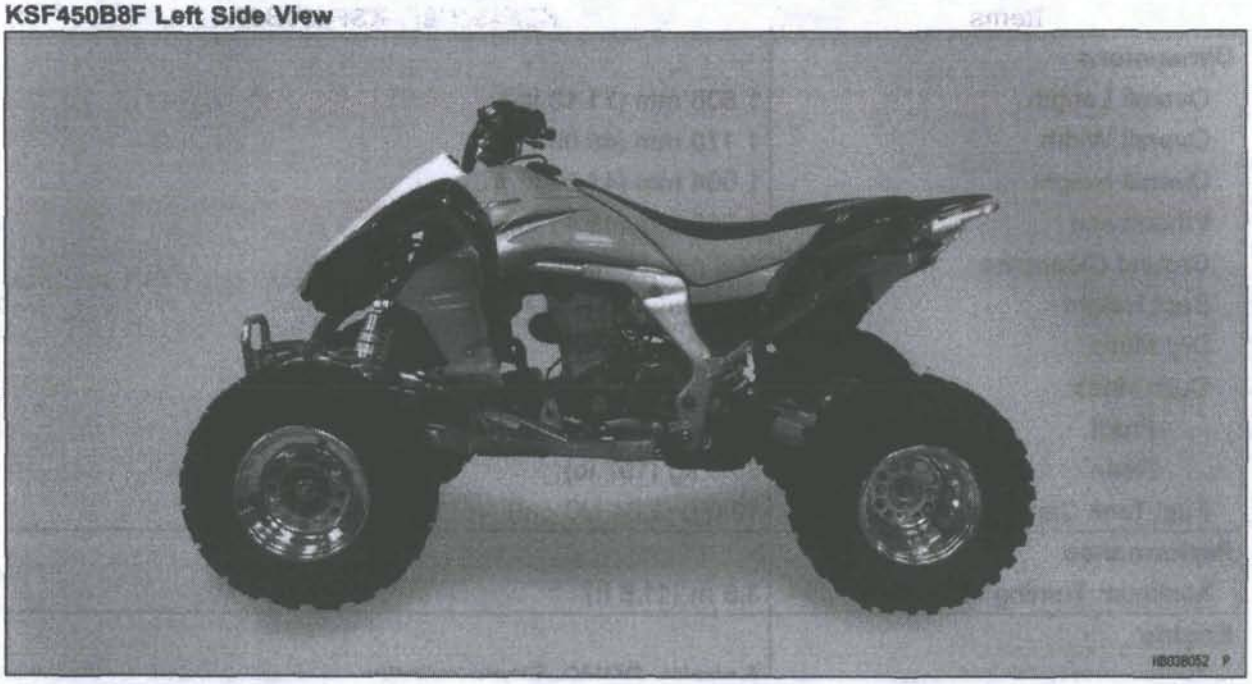

KSF450B8F Right Side View

Frame Number

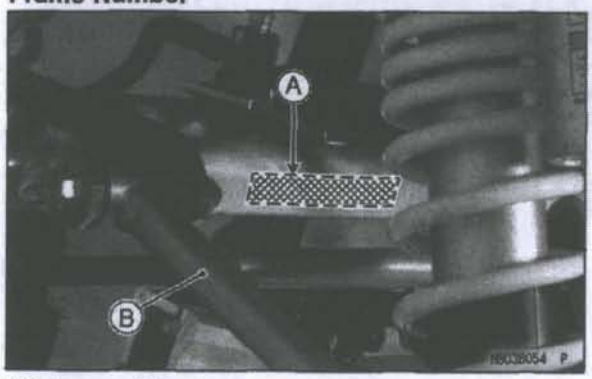

[A] Frame Number
[B] Left Suspension Arm

Engine Number

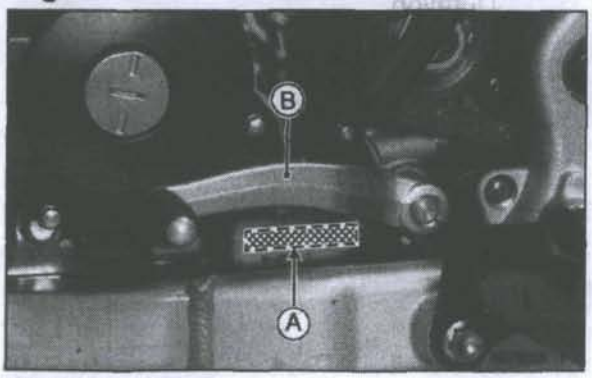

[A] Engine Number
[B] Shift Pedal

General Specifications

Items	KSF450B8F, KSF450B8FA
Dimensions	
Overall Length	1 806 mm (71.10 in.)
Overall Width	1 170 mm (46.06 in.)
Overall Height	1 064 mm (41.89 in.)
Wheelbase	1 255 mm (49.41 in.)
Ground Clearance	108 mm (4.25 in.)
Seat Height	786 mm (30.94 in.)
Dry Mass	165 kg (364 lb)
Curb Mass:	
Front	88.5 kg (195 lb)
Rear	89.5 kg (197 lb)
Fuel Tank Capacity	10.0 L (2.64 US gal)
Performance	
Minimum Turning Radius	3.6 m (11.8 ft)
Engine	
Type	4-stroke, DOHC, Single-cylinder
Cooling System	Liquid-cooled
Bore and Stroke	96.0 × 62.1 mm (3.78 × 2.44 in.)
Displacement	449 cm³ (27.4 cu in.)
Compression Ratio	12.0 : 1
Maximum Horsepower	31.9 kW (43 PS) @7 500 r/min (rpm), (US) -
Maximum Torque	41.9 N·m (4.3 kgf·m, 31 ft·lb) @7 000 r/min (rpm)
Carburetion System	FI (Fuel Injection) Keihin ϕ42
Starting System	Electric Starter
Ignition System	Battery and Coil (transistorized ignition)
Timing Advance	Electronically advanced
Ignition Timing	From 10° BTDC@1 800 r/min (rpm) to 39.5° BTDC@6 000 r/min (rpm)
Spark Plug	NGK CPR8EB-9
Valve Timing:	
Inlet:	
Open	26° BTDC
Close	70° ABDC
Duration	276°
Exhaust:	
Open	82° BBDC
Close	24° ATDC
Duration	284°
Lubrication System	Forced lubrication (semi dry sump)
Engine oil:	
Type	API SF or SG API SH, SJ or SL with JASO MA
Viscosity	SAE 10W-40
Capacity	1.35 L (1.43 US qt)

General Specifications

Items	KSF450B8F, KSF450B8FA
Drive Train	
Primary Reduction System:	
Type	Gear
Reduction Ratio	2.952 (62/21)
Clutch Type	Wet, multi disc
Transmission:	
Type	5-speed and reverse, constant mesh, return shift
Gear ratios:	
1st	2.230 (29/13)
2nd	1.800 (27/15)
3rd	1.529 (26/17)
4th	1.278 (23/18)
5th	1.048 (22/21)
Reverse	2.364 (16/11 × 26/16)
Final Drive System:	
Type	Chain drive
Reduction Ratio	2.714 (38/14)
Overall Drive Ratio	8.395 @Top gear
Frame	
Type	Tubular, Double cradle
Caster (Rake Angle)	1.8°
Camber	-2°
King Pin Angle	14.7°
Trail	7.6 mm (0.30 in.)
Tread:	
Front	972 mm (38.27 in.)
Rear	899 mm (35.39 in.)
Front Tire:	
Type	Tubeless
Size	AT21 × 7-10
Rear Tire:	
Type	Tubeless
Size	AT20 × 10-9
Rim Size:	
Front	10 × 5.5
Rear	9 × 8
Suspension:	
Front:	
Type	Double Wishbone
Wheel Travel	215 mm (8.46 in.)
Rear:	
Type	Swingarm
Wheel Travel	254 mm (10.0 in.)

General Specifications

Items	KSF450B8F, KSF450B8FA
Brake:	
Front	Disc × 2
Rear	Disc
Parking Brake	Disc (Mechanical)
Electrical Equipment	
Battery	12 V 6 Ah
Headlight:	
Type	Semi-sealed beam
Bulb	12 V 30/30 W × 2
Tail/brake Light:	
Bulb	12 V 0.5/4.1 W (LED)
Alternator:	
Type	Three - phase AC
Rated Output	14 A, 14 V @5 000 r/min (rpm)

Specifications subject to change without notice, and may not apply to every country.

Unit Conversion Table

Prefixes for Units:

Prefix	Symbol	Power
mega	M	× 1 000 000
kilo	k	× 1 000
centi	c	× 0.01
milli	m	× 0.001
micro	μ	× 0.000001

Units of Mass:

kg	×	2.205	=	lb
g	×	0.03527	=	oz

Units of Volume:

L	×	0.2642	=	gal (US)
L	×	0.2200	=	gal (imp)
L	×	1.057	=	qt (US)
L	×	0.8799	=	qt (imp)
L	×	2.113	=	pint (US)
L	×	1.816	=	pint (imp)
mL	×	0.03381	=	oz (US)
mL	×	0.02816	=	oz (imp)
mL	×	0.06102	=	cu in

Units of Force:

N	×	0.1020	=	kg
N	×	0.2248	=	lb
kg	×	9.807	=	N
kg	×	2.205	=	lb

Units of Length:

km	×	0.6214	=	mile
m	×	3.281	=	ft
mm	×	0.03937	=	in

Units of Torque:

N·m	×	0.1020	=	kgf·m
N·m	×	0.7376	=	ft·lb
N·m	×	8.851	=	in·lb
kgf·m	×	9.807	=	N·m
kgf·m	×	7.233	=	ft·lb
kgf·m	×	86.80	=	in·lb

Units of Pressure:

kPa	×	0.01020	=	kgf/cm²
kPa	×	0.1450	=	psi
kPa	×	0.7501	=	cmHg
kgf/cm²	×	98.07	=	kPa
kgf/cm²	×	14.22	=	psi
cmHg	×	1.333	=	kPa

Units of Speed:

km/h	×	0.6214	=	mph

Units of Power:

kW	×	1.360	=	PS
kW	×	1.341	=	HP
PS	×	0.7355	=	kW
PS	×	0.9863	=	HP

Units of Temperature

$$\frac{9\,(°C + 40)}{5} - 40 = °F \qquad \frac{5\,(°F + 40)}{9} - 40 = °C$$

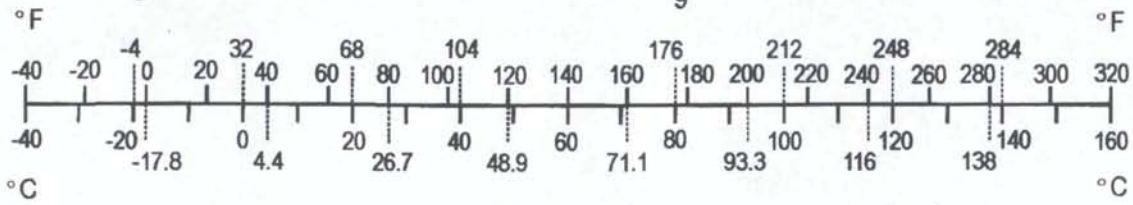

Periodic Maintenance

Table of Contents

Periodic Maintenance Chart

The scheduled maintenance must be done in accordance with this chart to keep the vehicle in good running condition. **The initial maintenance is vitally important and must not be neglected.**

FREQUENCY / OPERATION	First Service	Regular Service				
	After 10 hrs. or 100 km (60 mi.) of use	Every 10 days or 200 km (120 mi.) of use	Every 30 days or 600 km (360 mi.) of use	Every 90 days or 1 700 km (1 100 mi.) of use	Every year of use	See page
ENGINE						
Air cleaner - inspect*	●	●				2-15
Throttle lever play - inspect	●	●				2-14
Idle speed - inspect			●			2-14
Reverse lock release lever play - inspect	●	●				2-26
Valve clearance - inspect*	First 1 700 km (1 100 mi.); thereafter every 3 400 km (2 200 mi.)					2-20
Engine oil - change*	●			●		2-24
Oil filter - replace *	●			●		2-25
Spark plug - clean and gap	●			●		2-35 2-36
Spark arrester - clean					●	2-23
Fuel hoses and connections - inspect				●		2-16
Fuel hose - replace	4 years					2-16
Radiator - clean*	●	●				2-17
Radiator hoses and connections - check*					●	2-18
Coolant - change*	2 years					2-18
Clutch operation (play, disengagement, engagement) - inspect	●	●				2-24
CHASSIS						
Joint boots - inspect*	●	●				2-35
Bolts and nuts - tighten	●	●				2-38
Brake pad wear - inspect*	●		●			2-30
Brake light switch - inspect*	●		●			2-36
Steering - inspect	●			●		2-35
Tire wear - inspect*			●			2-27
General lubrication*			●			2-36
Brake fluid level - inspect	●		●			2-32
Brake fluid - change					●	2-33
Brake hoses and connections - inspect				●		2-30
Brake master cylinder piston assembly and dust cover - replace	2 years					2-34
Brake caliper fluid seal and dust seal - replace	2 years					2-34

Periodic Maintenance Chart

FREQUENCY / OPERATION	First Service	Regular Service				
	After 10 hrs. or 100 km (60 mi.) of use	Every 10 days or 200 km (120 mi.) of use	Every 30 days or 600 km (360 mi.) of use	Every 90 days or 1 700 km (1 100 mi.) of use	Every year of use	See page
Brake hose - replace	4 years					2-31
Drive chain lubrication condition - inspect*				●		2-29
Drive chain slack - inspect*				●		2-27
Drive chain wear - inspect*				●		2-28
Drive chain guide wear - inspect				●		2-30

*: Service more frequently when operated in mud, dust, or other harsh riding conditions, or when carrying heavy loads or pulling a trailer.

●: Clean, adjust, lubricate, torque, or replace parts as necessary.

Torque and Locking Agent

The following tables list the tightening torque for the major fasteners, and the parts requiring use of a non-permanent locking agent or liquid gasket.

Letters used in the "Remarks" column mean:
L: Apply a non-permanent locking agent.
Lh: Left-hand Threads
MO: Apply molybdenum disulfide oil solution (mixture of the engine oil and molybdenum disulfide grease in a weight ratio 10:1).
R: Replacement Parts
S: Follow the specified tightening sequence.
Si: Apply silicone grease.
SS: Apply silicone sealant (Kawasaki Bond: 56019-120).
St: Stake the fasteners to prevent loosening.

Fastener	Torque			Remarks
	N·m	kgf·m	ft·lb	
Fuel System (DFI)				
Fuel Tank Mounting Bolts	9.3	0.95	82 in·lb	
Air Cleaner Housing Bolts	8.8	0.90	78 in·lb	
Front Air Cleaner Duct Clamp Screws	1.4	0.14	12 in·lb	
Rear Air Cleaner Duct Clamp Screws	1.4	0.14	12 in·lb	
Fuel Pump Bolts	9.8	1.0	87 in·lb	L
ECU Mounting Bolts	8.8	0.90	78 in·lb	
Inlet Air Pressure Sensor Bracket Mounting Bolt	8.8	0.90	78 in·lb	
Inlet Air Temperarure Sensor Mounting Screw	4.9	0.50	43 in·lb	
Throttle Case Cover Screws	2.0	0.20	18 in·lb	
Throttle Lever Assy Mounting Bolts	3.8	0.39	34 in·lb	
Air Cleaner Housing Bracket Bolts	1.0	0.10	8.9 in·lb	
Cooling System				
Radiator Hose Fitting Bolts	9.8	1.0	87 in·lb	
Coolant Drain Bolt	7.0	0.71	62 in·lb	
Water Pump Impeller Bolt	9.8	1.0	87 in·lb	
Water Pump Cover Bolts	9.8	1.0	87 in·lb	
Reserve Tank Screws	3.5	0.36	31 in·lb	
Radiator Hose Clamp Screws	2.0	0.20	18 in·lb	
Radiator Mounting Bolts	8.8	0.90	78 in·lb	
Radiator Screen Screws	3.5	0.36	31 in·lb	
Radiator Fan Bolts	8.3	0.85	73 in·lb	
Engine Top End				
Throttle Body Holder Clamp Screw	2.0	0.20	18 in·lb	
Radiator Hose Fitting Bolts	9.8	1.0	87 in·lb	
Camshaft Cap Bolts	12	1.2	106 in·lb	
Decompressor Plug Plate Bolt	9.8	1.0	87 in·lb	
Plug	20	2.0	15	L
Cylinder Head Cover Bolts	9.8	1.0	87 in·lb	
Cylinder Head Bolts (M10)	59	6.0	44	S,MO
Cylinder Head Bolts (M6)	12	1.2	106 in·lb	S
Oil Passage Plug	3.0	0.30	27 in·lb	L

Torque and Locking Agent

Fastener	Torque			Remarks
	N·m	kgf·m	ft·lb	
Cylinder Bolts	12	1.2	106 in·lb	
Chain Tensioner Mounting Bolts	9.8	1.0	87 in·lb	
Chain Tensioner Cap Bolt	5.0	0.51	44 in·lb	
Rear Camshaft Chain Guide Bolt	15	1.5	11	EO
Camshaft Sprocket Bolts	12	1.2	106 in·lb	L
Muffler Mounting Bolts	35	3.6	26	
Exhaust Pipe Cover Bolts	12	1.2	106 in·lb	
Exhaust Pipe Holder Nuts	20	2.0	15	
Muffler Joint Clamp Bolt	20	2.0	15	
Muffler Body End Cover Bolts	8.8	0.90	78 in·lb	
Oil Pump (Scavenge) Cover Bolts	9.8	1.0	87 in·lb	
Engine Right Side				
Primary Gear Nut	98	10	72	Lh
Clutch Spring Bolts	8.8	0.90	78 in·lb	
Clutch Hub Nut	98	10	72	
Clutch Cable Holder Mounting Bolts	9.8	1.0	87 in·lb	
Upper Ratchet Plate Mounting Bolt	9.8	1.0	87 in·lb	S
Lower Ratchet Plate Mounting Bolt	15	1.5	11	S,L
Clutch Cover Bolts	9.8	1.0	87 in·lb	
Right Engine Cover Bolts	9.8	1.0	87 in·lb	
Shift Pedal Bolt	9.8	1.0	87 in·lb	
Shift Drum Cam Bolt	29	3.0	21	L
Gear Positioning Lever Nut	8.8	0.90	78 in·lb	
Lubrication System				
Engine Oil Drain Bolt (M6)	7.0	0.71	62 in·lb	
Engine Oil Drain Bolt (M12)	15	1.5	11	
Oil Pump (Scavenge) Cover Bolts	9.8	1.0	87 in·lb	
Oil Pump (Feed) Cover Bolts	8.8	0.90	78 in·lb	
Oil Pressure Relief Valve	15	1.5	11	L
Oil Filter Cover Bolts	9.8	1.0	87 in·lb	
Oil Pipe Mounting Bolt	9.8	1.0	87 in·lb	
Engine Removal/Installation				
Front Engine Bracket Bolts	30	3.0	22 in·lb	
Upper Engine Mounting Bolts	46	4.7	34 in·lb	S
Lower Engine Bracket Nut	46	4.7	34 in·lb	
Front Engine Mounting Nut	46	4.7	34 in·lb	S
Lower Engine Mounting Nut	46	4.7	34 in·lb	S
Upper Engine Bracket Bolts	30	3.0	22 in·lb	
Crankshaft/Transmission				
Balancer Weight Mounting Nut	52	5.3	38	
Reverse Idle Gear Holder Bolts	12	1.2	106 in·lb	L
Neutral/Reverse Switch Screws	4.9	0.50	43 in·lb	
Reverse Cable Cap Bolt	8.8	0.90	78 in·lb	

Torque and Locking Agent

Fastener	Torque			Remarks
	N·m	kgf·m	ft·lb	
Crankcase Bolts	9.8	1.0	87 in·lb	S
Bearing Retaining Bolts	19	1.9	14	L
Piston Oil Nozzle	2.9	0.30	26 in·lb	St
Wheels/Tires				
Front Wheel Nuts	79	8.0	58	S
Rear Wheel Nuts	79	8.0	58	S
Front Hub Nuts	71.5	7.3	53	
Rear Hub Nuts	265	27	195	R
Tie-rod Locknuts	22	2.2	16	Lh (2)
Final Drive				
Rear Axle Clamp Bolts	32	3.3	24	
Rear Sprocket Bolts	36.5	3.7	27	L
Rear Sprocket Nuts	31.5	3.2	23	
Engine Sprocket Nut	127	13	94	
Engine Sprocket Cover Bolts	8.8	0.90	78 in·lb	
Chain Guide Roller Mounting Nut	31.5	3.2	23	
Rear Axle Locknut (Inner)	200	20	148	
Rear Axle Locknut (Outer)	250	25	184	
Brakes				
Brake Pedal Pivot Bolt	19.6	2.0	14	
Front Caliper Bleed Valves	7.8	0.80	69 in·lb	
Front Brake Disc Mounting Bolts	36.5	3.7	27	L
Front Brake Hose Banjo Bolts	26.5	2.7	20	
Front Brake Hose Fitting Nut	18	1.8	13	
Front Master Cylinder Clamp Bolts	8.8	0.90	78 in·lb	S
Brake Lever Pivot Bolt	5.9	0.60	52 in·lb	Si
Brake Lever Pivot Bolt Locknut	5.9	0.60	52 in·lb	
Front Brake Light Swith Mounting Bolt	1.2	0.12	11 in·lb	
Front Brake Reservoir Cap Screws	1.5	0.15	13 in·lb	
Front Caliper Mounting Bolts	26.5	2.7	20	
Parking Brake Adjusting Bolt Locknut	17	1.7	12	
Parking Brake Bracket Mounting Bolts	22	2.2	16	
Parking Lever Pivot Bolt	16	1.6	12	
Rear Caliper Bleed Valve	5.4	0.55	48 in·lb	
Rear Brake Disc Mounting Bolts	36.5	3.7	27	L
Rear Brake Disc Mounting Nuts	17.5	1.8	13	
Rear Brake Hose Banjo Bolts	24.5	2.5	18	
Rear Brake Pad Bolts	17	1.7	12	
Rear Brake Reservoir Cap Bolts	1.5	0.15	13 in·lb	
Rear Caliper Mounting Bolts	26.5	2.7	20	L
Rear Master Cylinder Mounting Bolts	9.3	0.95	82 in·lb	
Rear Master Cylinder Push Rod Locknut	17	1.7	12	

Torque and Locking Agent

Fastener	Torque			Remarks
	N·m	kgf·m	ft·lb	
Suspension				
Swingarm Pivot Shaft Nut	90.5	9.2	67	
Swingarm Adjusting Locknut	31.5	3.2	23	L
Suspension Arm Pivot Nuts	36.5	3.7	27	
Knuckle Joint Nuts	29	3.0	21	
Tie-rod Mounting Nut	71.5	7.3	53	
Rocker Arm Pivot Nut	71.5	7.3	53	
Tie-rod Adjusting Nut	61.5	6.3	45	
Tie-rod Adjusting Locknut	46.5	4.7	34	
Front Shockabsorber Mounting Nuts	36.5	3.7	27	
Rear Shockabsorber Mounting Nut (Upper)	36.5	3.7	27	
Rear Shockabsorber Mounting Nut (Lower)	36.5	3.7	27	
Swingarm Adjusting Bolt	6.0	0.61	53 in·lb	
Steering				
Steering Stem Bottom End Nut	36.5	3.7	27	
Steering Stem Bearing Joint Bolts	22	2.2	16	L
Tie-rod End Nuts	36.5	3.7	27	
Steering Stem Clamp Bolts	24.5	2.5	18	
Tie-rod Locknuts	22	2.2	16	Lh (2)
Handlebar Holder Mounting Nuts	36.5	3.7	27	
Handlebar Clamp Bolts	29	3.0	21	S
Left Handlebar Switch Housing Screws	3.5	0.36	31 in·lb	
Frame				
Footpeg Mounting Bolts	41.5	4.2	31	
Rear Fender Mounting Bolts	9.3	0.95	82 in·lb	
Front Guard Bolts	26.5	2.7	20	
Engine Bottom Guard Bolts	9.3	0.95	82 in·lb	
Rear Bottom Guard Bolts	24.5	2.5	18	
Rear Fender Bracket Mounting Bolts	29.5	3.0	22	
Lower Rear Frame Mounting Bolts	29.5	3.0	22	L
Upper Rear Frame Mounting Bolts	35	3.6	26	L
Lower Foot Guard Bracket Bolts	12.5	1.3	111 in·lb	L
Upper Foot Guard Bracket Bolts	27	2.8	20	L
Electrical Parts Bracket Bolts	12.5	1.3	111 in·lb	
Electrical System				
Tail/Brake Light Unit Mounting Bolts	1.2	0.12	11 in·lb	
Tolque Limiter Cover Bolt	9.8	1.0	87 in·lb	
Alternator Cover Bolts	9.8	1.0	87 in·lb	
Alternator Cover and Torque Limiter Cover Bolts	9.8	1.0	87 in·lb	
Alternator Stator Bolts	9.8	1.0	87 in·lb	L
Crankshaft Sensor Bolts	7.0	0.71	62 in·lb	
Alternator Rotor Nut	98	10	72	
Starter Motor Mounting Bolts	9.8	1.0	87 in·lb	

Torque and Locking Agent

Fastener	Torque			Remarks
	N·m	kgf·m	ft·lb	
Starter Motor Terminal Nut	9.8	1.0	87 in·lb	
Spark Plug	13	1.3	115 in·lb	
Regulator/Rectifier Bolts	8.8	0.90	78 in·lb	
Starter Relay Cable Terminal Bolts	4.0	0.41	35 in·lb	
Ignition Coil Nuts	8.8	0.90	78 in·lb	
Starter Motor Terminal Locknut	11	1.1	97 in·lb	
Starter Motor Through Bolts	5.0	0.51	44 in·lb	
Ignition Switch Mounting Nut	2.8	0.28	25 in·lb	

Torque and Locking Agent

The tables below, relating tightening torque to thread diameter, lists the basic torque for the bolts and nuts. Use this table for only the bolts and nuts which do not require a specific torque value. All of the values are for use with dry solvent-cleaned threads.

Basic Torque for General Fasteners of Engine Parts

Threads dia. mm (in.)	Mark of bolt head	Torque		
		N·m	kgf·m	ft·lb
6 (0.24)	9T	12 ~ 15	1.2 ~ 1.5	104 ~ 130 in·lb
6 (0.24)	7T	7.8 ~ 9.8	0.8 ~ 1.0	69 ~ 87 in·lb
6 (0.24)	4T	3.9 ~ 4.9	0.4 ~ 0.50	35 ~ 43 in·lb
8 (0.31)	7T	18 ~ 22	1.8 ~ 2.2	13 ~ 16
8 (0.31)	4T	10 ~ 14	1.0 ~ 1.4	87 ~ 122 in·lb
10 (0.39)	7T	39 ~ 44	4.0 ~ 4.5	29 ~ 33
10 (0.39)	4T	20 ~ 24	2.0 ~ 2.4	14 ~ 17
5 (0.20)	4T	2.2 ~ 2.6	0.22 ~ 0.27	19 ~ 23 in·lb

Basic Torque for General Fasteners of Frame Parts

Threads dia. mm (in.)	Torque		
	N·m	kgf·m	ft·lb
5 (0.20)	3.4 ~ 4.9	0.35 ~ 0.50	30 ~ 43 in·lb
6 (0.24)	5.9 ~ 7.8	0.60 ~ 0.80	52 ~ 69 in·lb
8 (0.31)	14 ~ 19	1.40 ~ 1.90	10 ~ 13
10 (0.39)	25 ~ 34	2.60 ~ 3.50	19 ~ 25
12 (0.47)	44 ~ 61	4.50 ~ 6.20	33 ~ 45
14 (0.55)	73 ~ 98	7.40 ~ 10.0	54 ~ 72
16 (0.63)	115 ~ 155	11.5 ~ 16.0	83 ~ 115
18 (0.71)	165 ~ 225	17.0 ~ 23.0	125 ~ 165
20 (0.79)	225 ~ 325	23.0 ~ 33.0	165 ~ 240

Specifications

Item	Standard	Service Limit
Fuel System		
Throttle Lever Free Play	2 ~ 3 mm (0.08 ~ 0.12 in.)	– – –
Idle Speed	1 800 ±100 r/min (rpm)	– – –
Air Cleaner Element Oil	High-quality foam air filter oil	– – –
Cooling System		
Coolant:		
Type (Recommended)	Permanent type of antifreeze (soft water and ethylene glycol plus corrosion and rust inhibitor chemicals for aluminum engines and radiators)	– – –
Color	Green	– – –
Mixed Ratio	Soft water 50%, Coolant 50%	– – –
Freezing Point	−35°C (−31°F)	– – –
Total Amount	1.4 L (1.5 US qt.)	– – –
Engine Top End		
Valve Clearance:		
Exhaust	0.17 ~ 0.22 mm (0.0067 ~ 0.0087 in.)	– – –
Inlet	0.10 ~ 0.15 mm (0.0039 ~ 0.0059 in.)	– – –
Engine Right Side		
Clutch Lever Free Play	5 ~ 10 mm (0.2 ~ 0.4 in.)	– – –
Engine Lubrication System		
Engine Oil:		
Type	API SF or SG API SH, SJ or SL with JASO MA	– – –
Viscosity	SAE 10 W - 40	
Capacity	1.15 L (1.22 US qt) (When filter is not removed.)	– – –
	1.20 L (1.27 US qt) (When filter is removed.)	– – –
	1.35 L (1.43 US qt) (When engine is completely dry.)	– – –
Crankshaft/Transmission		
Reverse Lock Release Lever		
Free Play	1 ~ 2 mm (0.04 ~ 0.08 in.)	– – –
Wheels/Tires		
Tire Tread Depth:		
Front	12.7 mm (0.500 in.)	3 mm (0.12 in.)
Rear	13.0 mm (0.512 in.)	3 mm (0.12 in.)
Standard tire:		
Front	AT 21 × 7 - 10 DUNLOP, KT391, Tubeless	– – – – – –
Rear	AT 20 × 10 - 9 DUNLOP, KT396, Tubless	– – – – – –

Specifications

Item	Standard	Service Limit
Final Drive		
Drive Chain Slack	40 ~ 50 mm (1.57 ~ 1.97 in.)	– – –
Drive Chain 20 Link Length	317.5 ~ 318.2 mm (12.50 ~ 12.53 in.)	323 mm (12.7 in.)
Rear Sprocket Warp	0.4 mm (0.016 in.) or less	0.5 mm (0.02 in.)
Brakes		
Brake Lever Free Play	(to suit rider)	– – –
Brake Fluid:		
Grade	DOT4	
Brake Pad Lining Thickness:		
Front	4.0 mm (0.16 in.)	1 mm (0.04 in.)
Rear	4.3 mm (0.17 in.)	1 mm (0.04 in.)
Electrical System		
Spark Plug Gap	0.8 ~ 0.9 mm (0.03 ~ 0.04 in.)	– – –
Rear Brake Light Switch Timing	ON after 10 mm (0.4 in.) of pedal travel	– – –

Special Tool

Filler Cap Driver:
57001-1454

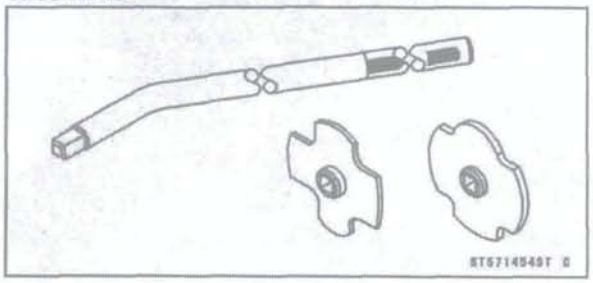

Fuel System

Throttle Lever Free Play Inspection

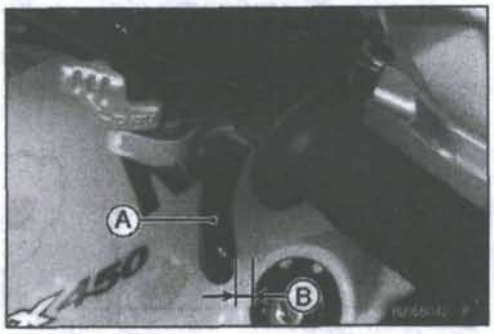

- Check that the throttle lever [A] moves smoothly from full open to close, and the throttle closes quickly and completely in all steering positions by the return spring.

★If the throttle lever does not return properly, check the throttle cable routing, lever free play, and cable damage. Then lubricate the throttle cable.

- Run the engine at the idle speed, and turn the handlebar all the way to the right and left to ensure that the idle speed does not change.

★If the idle speed increases, check the throttle lever free play and the cable routing.

- Stop the engine and check the throttle lever free play [B].

★If the free play is not within the specified range, adjust the cable.

Throttle Lever Free Play
Standard: 2 ~ 3 mm (0.08 ~ 0.12 in.)

Throttle Lever Free Play Adjustment

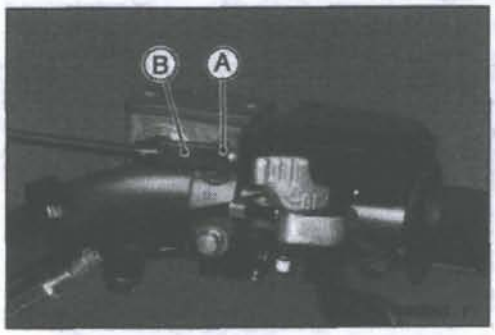

- Slide the rubber cover off the adjuster at the throttle case.
- Loosen the locknut [A] and turn the throttle cable adjuster [B] until the cable has proper amount of play.
- Tighten the locknut and reinstall the rubber cover.

Idle Speed Inspection

- Start the engine and warm it up thoroughly.
- With the engine idling, turn the handlebar to both sides to check for any changes in the idle speed.

★If handlebar movement changes the idle speed, the throttle cable may be improperly adjusted incorrectly routed, or damaged. Be sure to correct any of these conditions before riding.

⚠ WARNING

Operation with improperly adjusted, incorrectly routed, or damaged cables could result in an unsafe riding condition.

- Check idle speed with a suitable tachometer.

★If the idle speed is out of the specified range, adjust it (see Idle Speed Adjustment).

Idle Speed
Standard: 1 800 ±100 r/min (rpm)

Periodic Maintenance Procedures

Idle Speed Adjustment

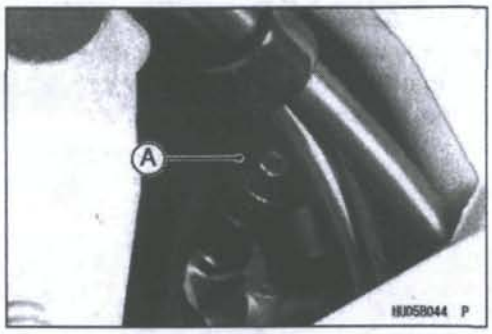

- Remove:
  Left Side Cover (see Side Cover Removal in the Frame chapter)
- Start the engine and warm it up thoroughly.
- Turn the idle adjuster [A] until the idle speed is correct.

○Open and close the throttle a few times to make sure that the idle speed is within the specified range.

Air Cleaner Element Cleaning and Inspection

NOTE

○*In dusty areas, the element should be cleaned more frequently than the recommended interval.*

○*After riding through rain or muddy terrains, the element should be cleaned immediately.*

○*Also, if there is a break in the element material or any other damage to the element, replace the element with a new one.*

⚠ WARNING

Clean the element in a well-ventilated area, and take care that there are no sparks or flame anywhere near the working area; this includes any appliance with a pilot light. Because of the danger of highly flammable liquids, do not use gasoline or a low-flash point solvent to clean the foam element.

- Remove the air cleaner element (see Air Cleaner Element Removal in the Fuel System (DFI) chapter).
- Clean the element [A] in a bath of high-flash point solvent.

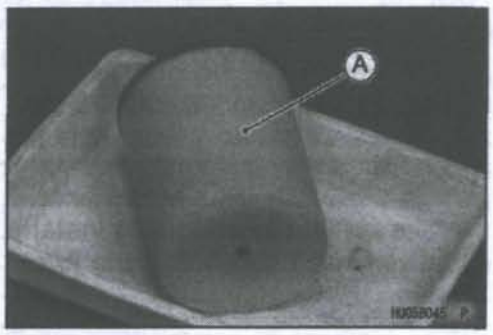

- Squeeze it dry in a clean towel [A]. Do not wring the element or blow it dry; the element can be damaged.
- Inspect the element for damage.

★If it is torn, punctured, or hardened, replace it.

- After cleaning, saturate the element with a high-quality foam-air-filter oil, squeeze out the excess oil, then wrap it in a clean rag and squeeze it as dry as possible. Be careful not to tear the element.

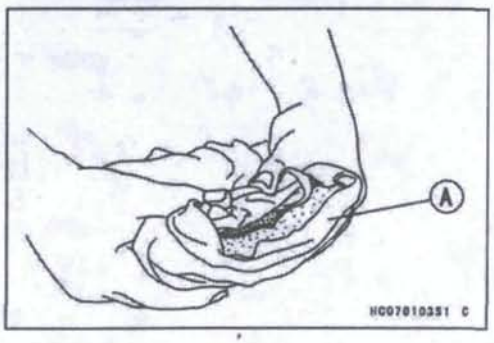

Air Cleaner Draining

- If any water or oil accumulates in the tube, drain it by taking off the drain plug [A]. After draining, be sure to install the drain plug and clamp firmly.

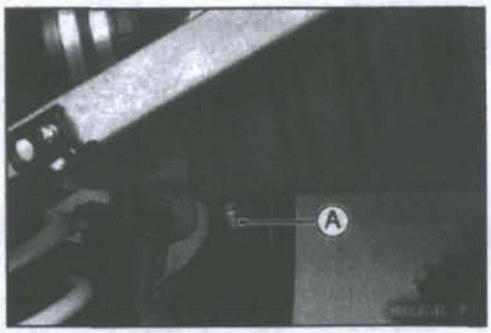

Fuel Hose Inspection (fuel leak, damage, installation condition)

○The fuel hose is designed to be used throughout the vehicle's life without any maintenance. However, if the vehicle is not properly handled, the high pressure inside the fuel line can cause fuel to leak [A] or the hose to burst. Remove the fuel tank (see Fuel Tank Removal in the Fuel System (DFI) chapter) and check the fuel hose.

★Replace the fuel hose if any fraying, cracks [B] or bulges [C] are noticed.

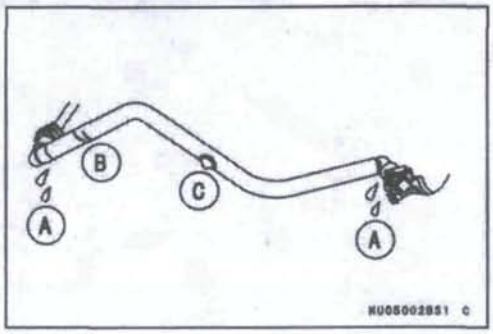

- Check that the hoses are routed according to Cable, Wire, and Hose Routing section in the Appendix chapter.

★Replace the hose if it has been sharply bent or kinked.

Hose Joints [A]
Fuel Hose [B]

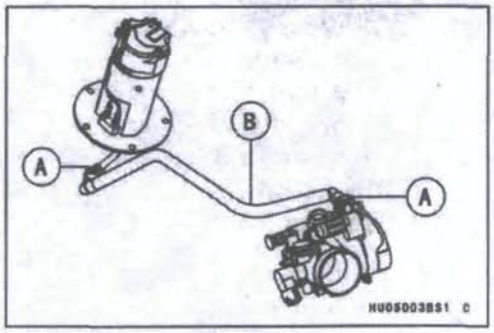

- Check that the hose joints are securely connected.

○Push and pull [A] the hose joint [B] back and forth more than two times, and make sure it is locked.

★If it does not locked, reinstall the hose joint.

⚠ WARNING

Make sure the hose joint is installed correctly on the delivery pipe by sliding the joint, or the fuel could leak.

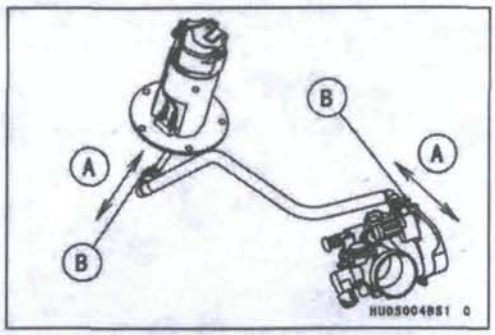

Fuel Hose Replacement

CAUTION

When removing and installing the fuel hose joint, do not apply strong force to the outlet pipe on the fuel pump and delivery pipe on the throttle body assy. The pipes made from resin could be damaged.

- Remove the fuel tank (see Fuel Tank Removal in the Fuel System (DFI) chapter).
- Be sure to place a piece of cloth around the fuel hose joint.
- Insert a minus screwdriver [A] into the slit [B] on the joint lock.

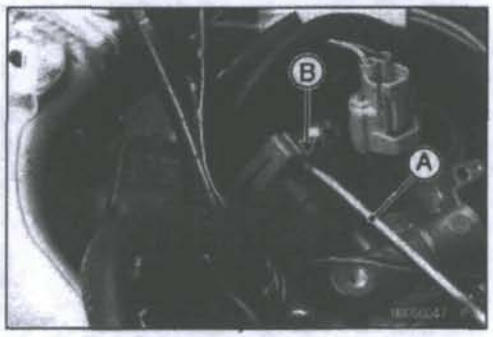

Periodic Maintenance Procedures

- Twist the screwdriver to disconnect the joint lock [A].
- Pull [B] the fuel hose joint [C] out of the delivery pipe.

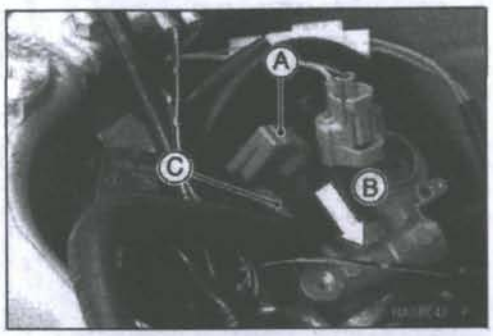

⚠ WARNING

Be prepared for fuel spillage; any spilled fuel must be completely wiped up immediately.
When the fuel hose is disconnected, fuel spills out from the hose and the pipe. Cover the hose connection with a clean shop towel to prevent fuel spillage.

- Install the new fuel hose.
- Insert [A] the fuel hose joint [B] straight onto the delivery pipe until the hose joint clicks.
- Push [C] the joint lock [D].

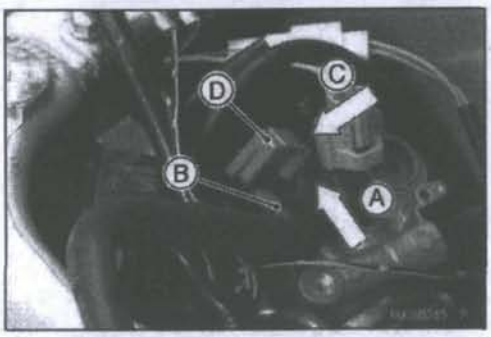

- Push and pull [A] the fuel hose joint [B] back and forth more than two times and make sure it is locked and doesn't come off.

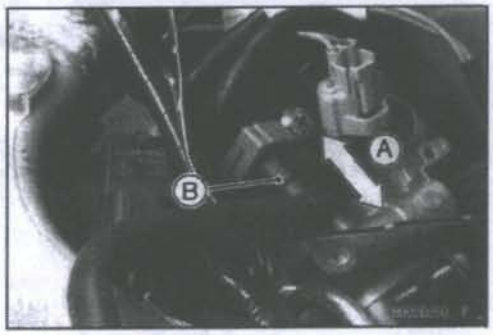

⚠ WARNING

Make sure the fuel hose joint is installed correctly on the delivery pipe or the fuel could leak.

★If it comes off, reinstall the hose joint.
- Run the fuel hose correctly (see Cable, Wire and Hose Routing section in the Appendix chapter).
- Install the removed parts (see appropriate chapters).
- Start the engine and check the fuel hose for leaks.

Cooling System

Radiator Cleaning

CAUTION

Clean the radiator screen and the radiator in accordance with the Periodic Maintenance Chart. In dusty areas, they should be cleaned more frequently than the recommended interval. After riding through muddy terrains, the radiator screen and the radiator should be cleaned immediately.

- Remove:
  Radiator (see Radiator Removal in the Cooling System chapter)
- Clean the radiator screen in a bath of tap water, and then dry it with compressed air or by shaking it.

- Clean the radiator.

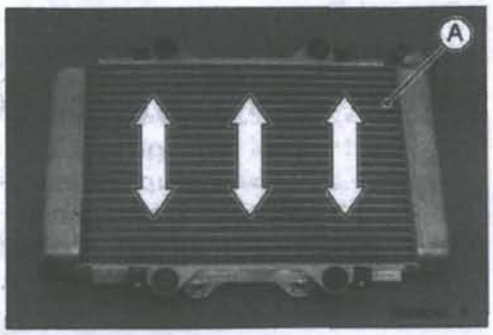

CAUTION

When cleaning the radiator with steam cleaner, be careful of the following to prevent radiator damage.
Keep the steam gun away more than 0.5 m (20 in.) from the radiator core [A].
Hold the steam gun perpendicular to the core surface.
Run the steam gun following the core fin direction.

Radiator Hose and Connection Inspection

○The high pressure inside the radiator hose can cause coolant to leak [A] or the hose to burst if the line is not properly maintained. Visually inspect the hoses for signs of deterioration. Squeeze the hoses. A hose should not be hard and brittle, nor should it be soft or swollen.

★Replace the hose if any fraying, cracks [B] or bulges [C] are noticed.

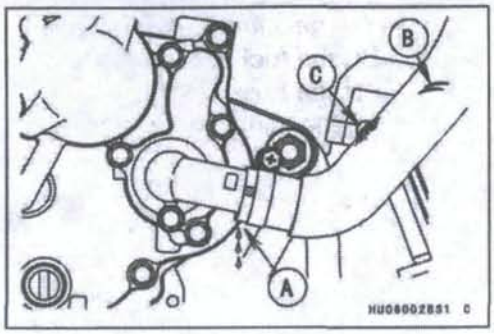

- Check that the hoses are securely connected and tighten the radiator hose clamp screws.

Torque - Radiator Hose Clamp Screws: 2.0 N·m (0.20 kgf·m, 18 in·lb)

Coolant Change

⚠ WARNING

To avoid burns, do not remove the radiator cap or try to change the coolant when the engine is still hot. Wait until it cools down.
Coolant on tires will make them slippery and can cause an accident and injury. Immediately wash away any coolant that spills on the frame, engine, or wheels.
Since coolant is harmful to the human body, do not use for drinking.

- Remove:
  Left Side Cover (see Side Cover Removal in the Frame chapter)

- Remove:
  Reserve Tank Screws [A]
  Reserve Tank [B] with Hose
- Remove the reserve tank cap [C], and pour the coolant into a container.

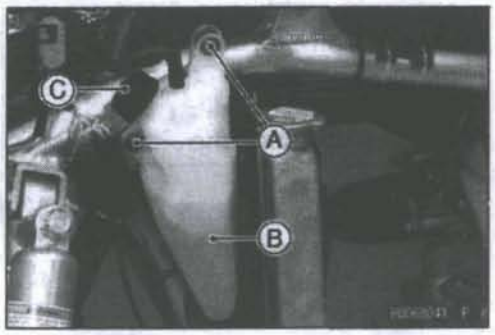

Periodic Maintenance Procedures

- Place a container under the drain bolt [A] at the bottom of the water pump cover, then remove the drain plug.

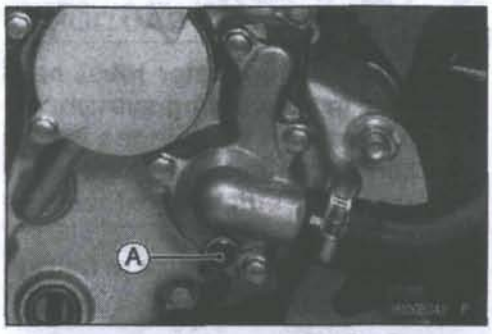

- Remove the radiator cap [A] in two steps. First turn the cap counterclockwise to the first step. Then push and turn it further in the same direction and remove the cap.
- The coolant will drain from the radiator and engine.

- Tighten:

  Torque - Coolant Drain Bolt: 7.0 N·m (0.71 kgf·m, 62 in·lb)
- Install the reserve tank.
- Apply a non-permanent locking agent to the reserve tank screws.
- Tighten:

  Torque - Reserve Tank Screws: 3.5 N·m (0.36 kgf·m, 31 in·lb)
- Support the vehicle on a stand or the jack so that the front wheels are off the ground. This makes air bleeding easier.
- Fill the radiator up to the radiator filler neck [A] with coolant.

NOTE

○*Pour in the coolant slowly so that the air in the engine and radiator can escape.*

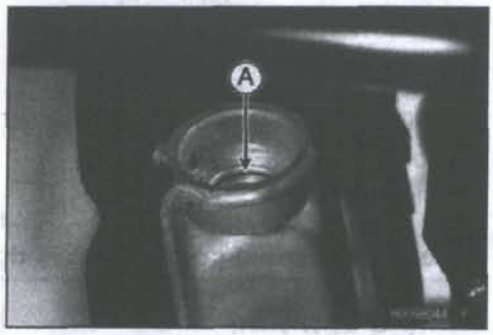

CAUTION

Soft or distilled water must be used with the antifreeze in the cooling system.
If hard water is used in the system, it causes scale accumulation in the water passages, considerably reducing the efficiency of the cooling system.

Water and Coolant Mixture Ratio (when shipping)

Soft Water:	**50%**
Coolant:	**50%**
Freezing Point:	**−35°C (−31°F)**
Total Amount:	**1.4 L (1.5 US qt)**

NOTE

○*Choose a suitable mixture ratio by referring to the coolant manufacturer's directions.*

- Bleed the air from the cooling system as follows.

○Start the engine with the radiator cap removed and run it until no more air bubbles [A] can be seen in the coolant.
○Tap the radiator hoses to force any air bubbles caught inside.
○Stop the engine and add coolant up to the radiator filler neck.

- Install the radiator cap.

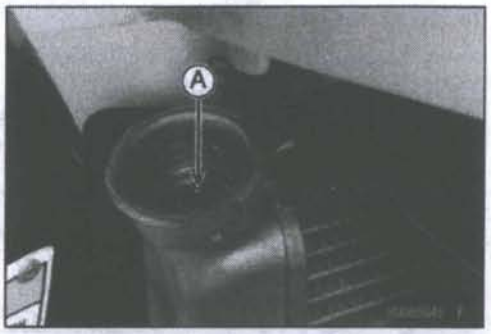

- Remove the reserve tank cap.
- Fill the reserve tank up to the F mark [A] with coolant and install the cap.
- Start the engine, warm it up thoroughly until the radiator fan turns on and then stop the engine.
- Check the coolant level in the reserve tank after the engine cools down.

★If the coolant level is lower than the low level line, add coolant to the full level line.

CAUTION

Do not add more coolant above the full level line.

Engine Top End

Valve Clearance Inspection

NOTE

○*Valve clearance must be checked and adjusted when the engine is cold (at room temperature).*

- Remove:
  Cylinder Head Cover (see Cylinder Head Cover Removal in the Engine Top End chapter)
  Alternator Rotor Nut Cap [A]
  Timing Inspection Cap [B]

Special Tool - Filler Cap Driver: 57001-1454

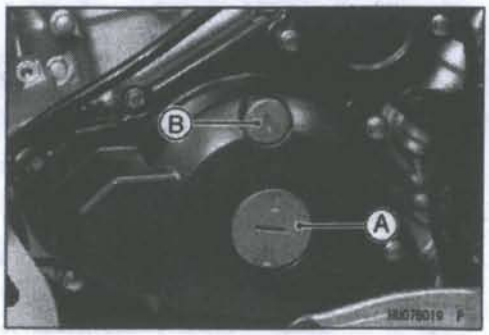

Periodic Maintenance Procedures

- First, bring the piston to the top-dead-center of its compression stroke to inspect the valve clearance (the position at the end of the compression stroke), when the cam lobe faces outside of the camshaft.

○Place a wrench over the alternator rotor nut and turn it counterclockwise to align the TDC mark [A] with the center of the groove [B] of the inspection hole.

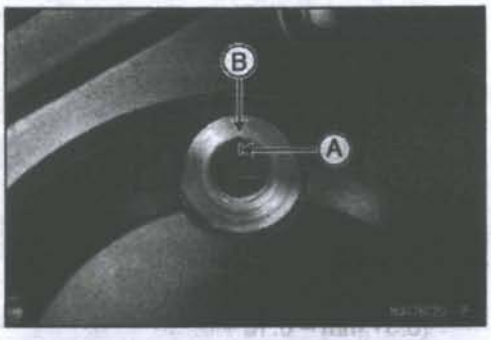

- Using a thickness gauge [A], measure the clearance between each cam lob and valve lifter for all four valves.

○For the purpose of adjusting the valve clearances, record the measured values.

Valve Clearance: between cam and valve lifter
Standard:

Exhaust	**0.17 ~ 0.22 mm (0.0067 ~ 0.0087 in.)**
Inlet	**0.10 ~ 0.15 mm (0.0039 ~ 0.0059 in.)**

★If the valve clearance is not within the specified range, adjust it.

Valve Clearance Adjustment

- Remove the camshaft caps [A] (see Camshaft Removal in the Engine Top End chapter).
- Remove the camshafts [B] (see Camshaft Removal in the Engine Top End chapter).
- Remove the valve lifters [C] of the applicable valve.
- Remove the shim [D] from the top of the spring retainer.

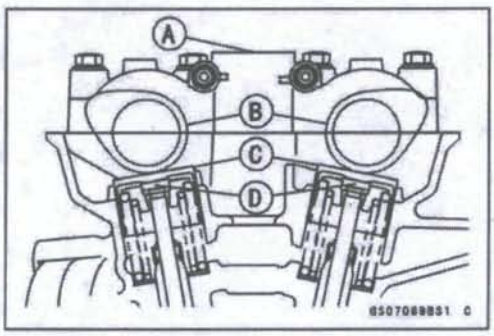

NOTE

○*Mark and record the locations of the valve lifters and shims so that they can be reinstalled in their original positions.*

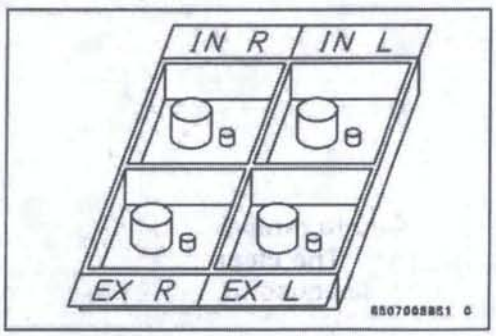

Periodic Maintenance Procedures

- Clean the shim to remove any dust or oil.
- Measure the thickness of the removed shim [A].
- Select a new shim thickness calculation as follows.

  A = (B – C) + D

  [A] Replace Shim Thickness
  [B] Measured Valve Clearance
  [C] Specified Valve Clearance
  [D] Present Shim Thickness

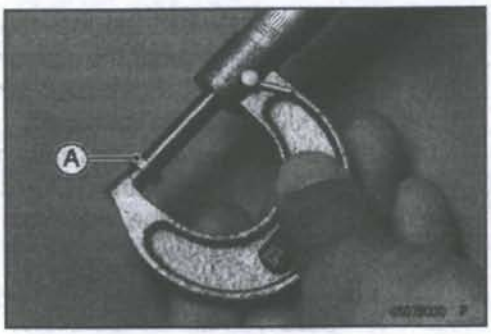

Example

(0.31 mm – 0.10 ~ 0.15 mm) + 2.60 mm = 2.81 ~ 2.76 mm

○Exchange the shims for the 2.775 or 2.800 size shim.

CAUTION
Don't use the shims for another models. This could cause wear of the valve stem end, and valve stem damage.

Adjustment shims

Thick-ness	P/No.	Mark	Thick-ness	P/No.	Mark
2.00	92025-1870	0	2.525	92025-1984	53
2.05	92025-1871	5	2.55	92025-1881	55
2.10	92025-1872	10	2.575	92025-1985	58
2.15	92025-1873	15	2.60	92025-1882	60
2.20	92025-1874	20	2.65	92025-1883	65
2.25	92025-1875	25	2.70	92025-1884	70
2.30	92025-1876	30	2.75	92025-1885	75
2.35	92025-1877	35	2.80	92025-1886	80
2.40	92025-1878	40	2.85	92025-1887	85
2.425	92025-1982	43	2.90	92025-1888	90
2.45	92025-1879	45	2.95	92025-1889	95
2.475	92025-1983	48	3.00	92025-1890	00
2.50	92025-1880	50			

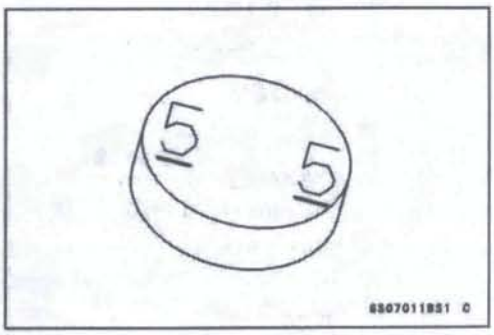

CAUTION
Be sure to remeasure the clearance after selecting a shim. The clearance can be out of the specified range because of the shim tolerance.

○If there is no valve clearance, use a shim that is a few sizes smaller, and remeasure the valve clearance.